INSTALLATION GUIDE

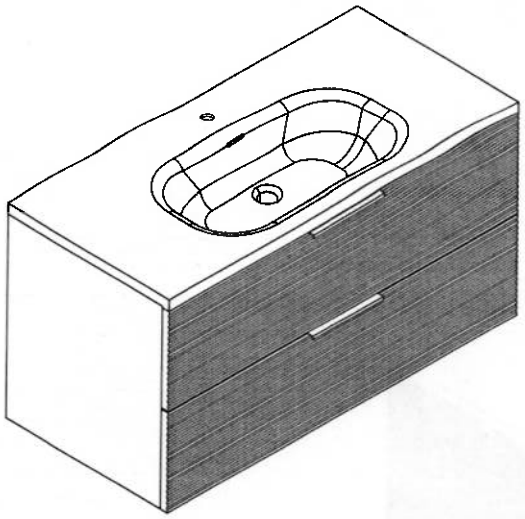

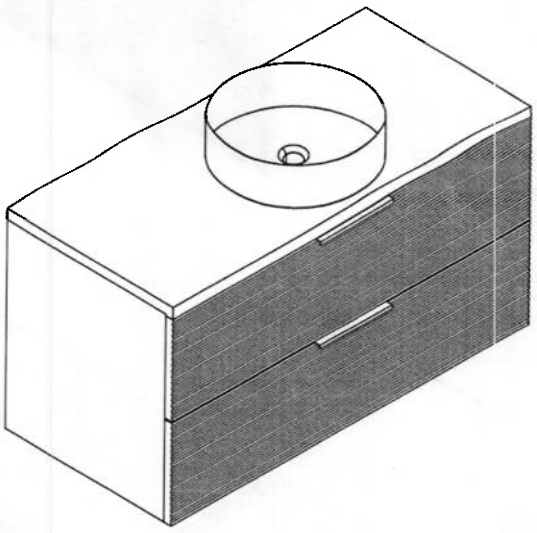

PRE-INSTALLATION - TOOLS REQUIRED

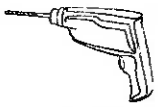

Drill

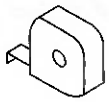

Measuring tape

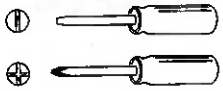

Screwdriver



Silicone

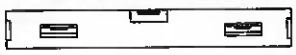

Level



Pencil

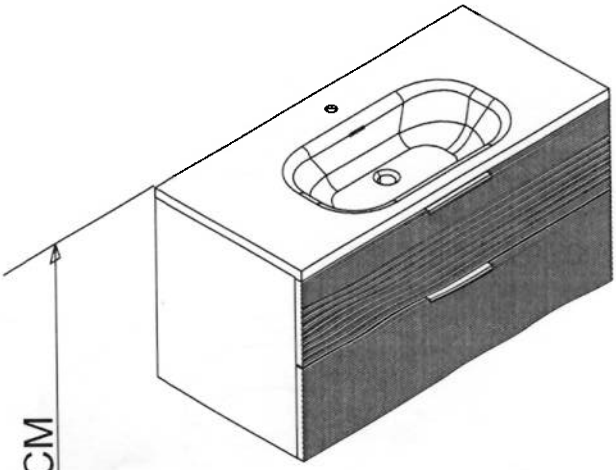

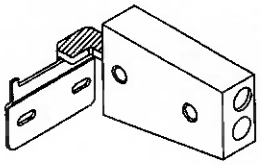



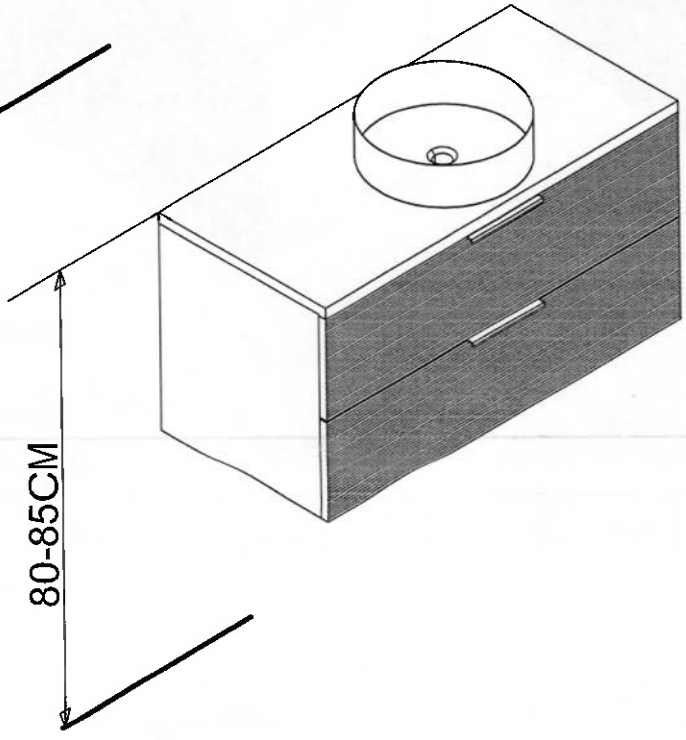

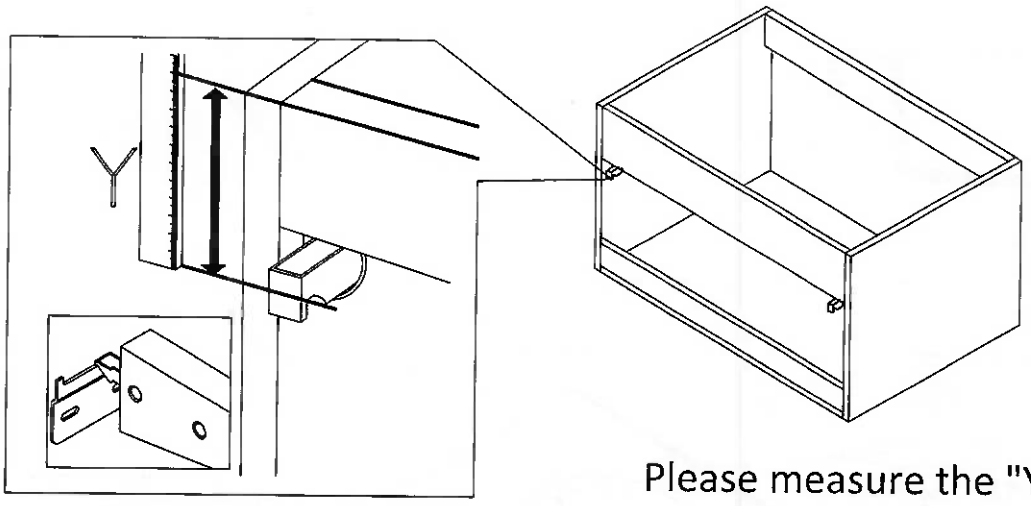

Please measure the "Y" size

2

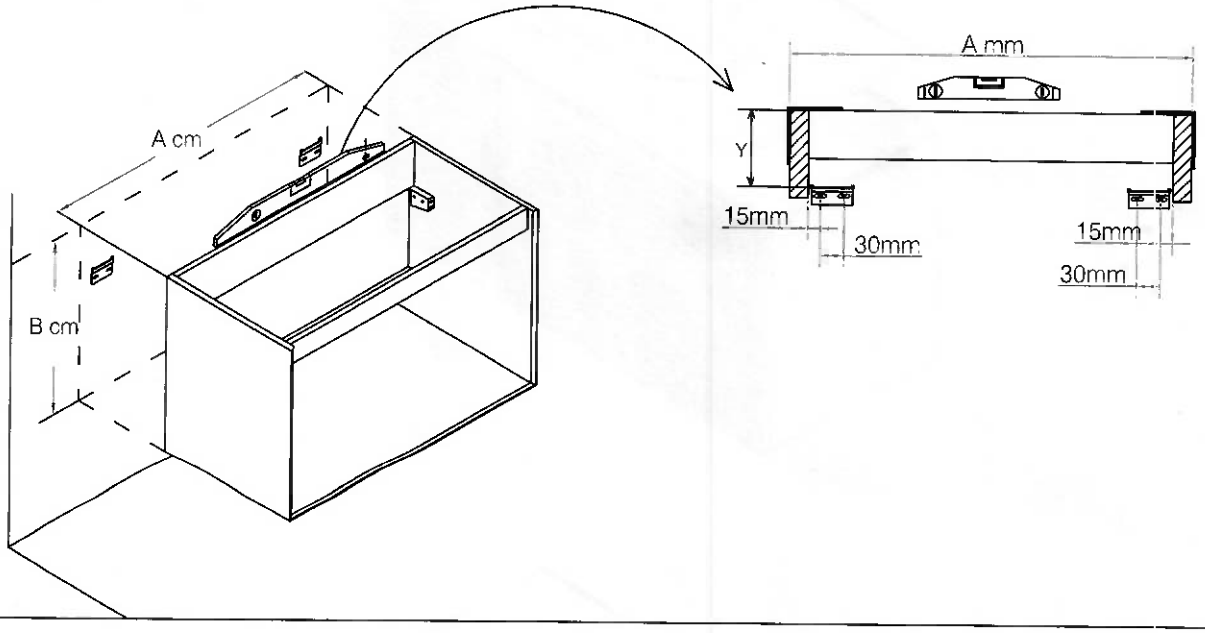

3

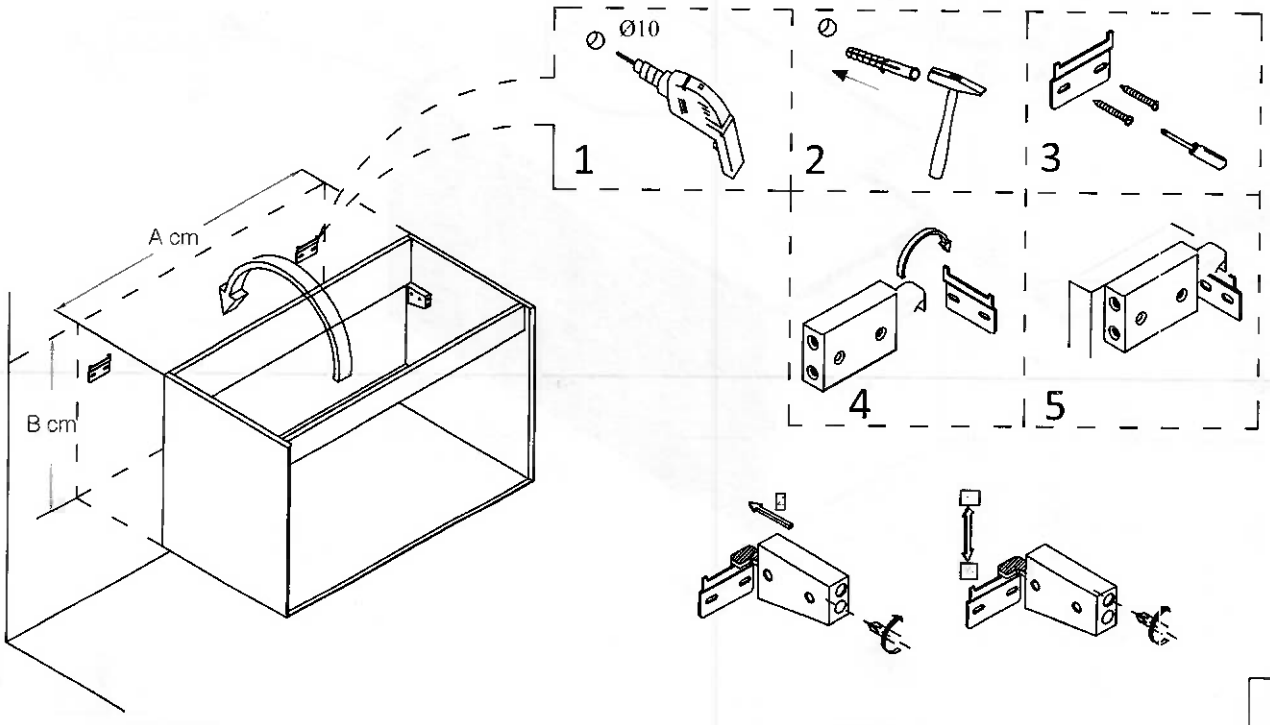

4

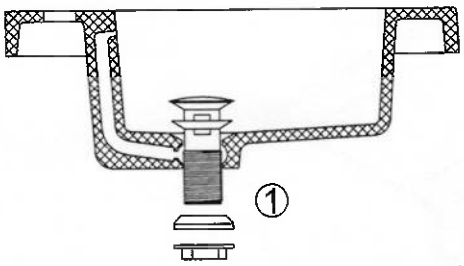
①

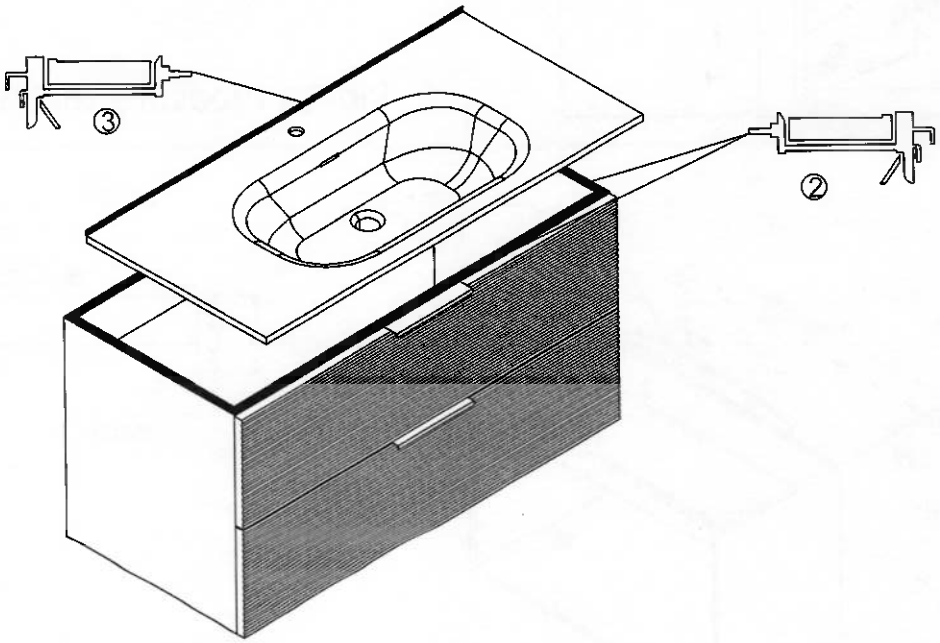
③
②

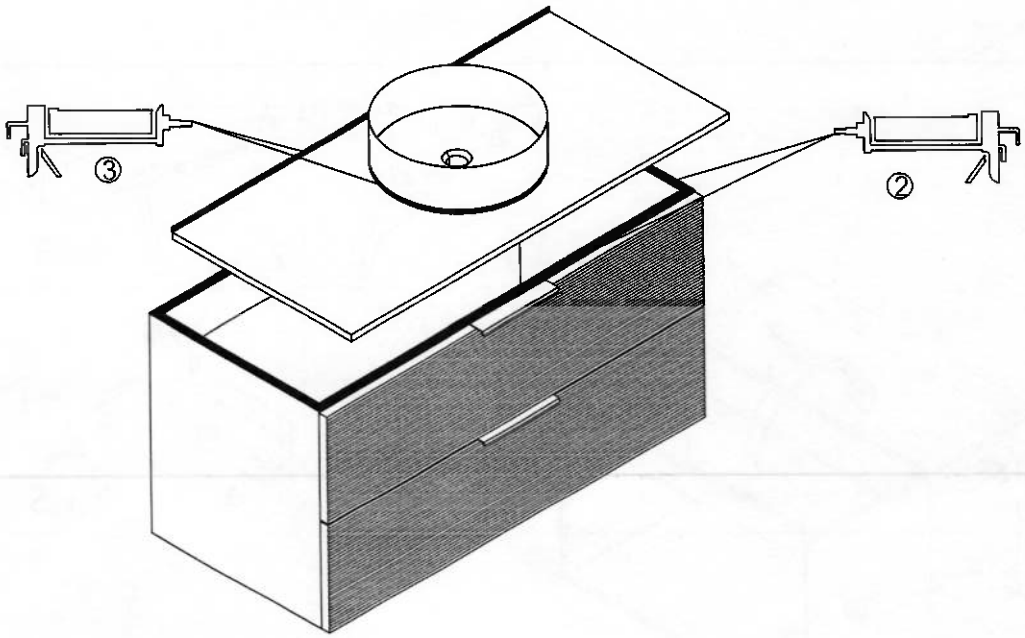
③
②


24H