INSTALLATION GUIDE

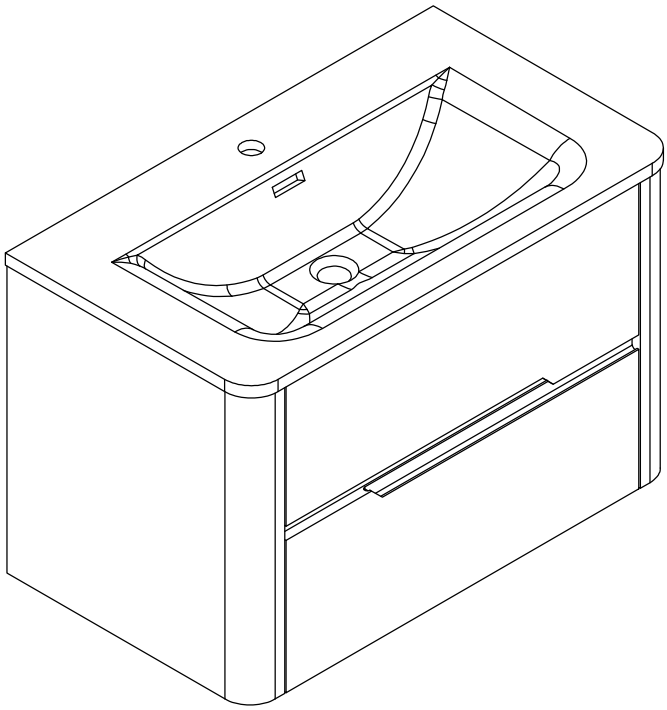

PRE-INSTALLATION - TOOLS REQUIRED

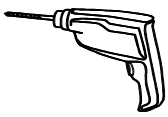

Drill

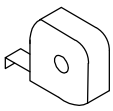

Measuring tape

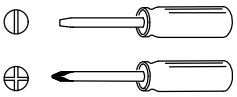

Screwdriver

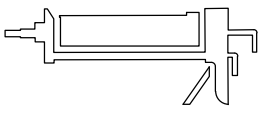

Silicone

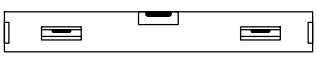

Level



Pencil

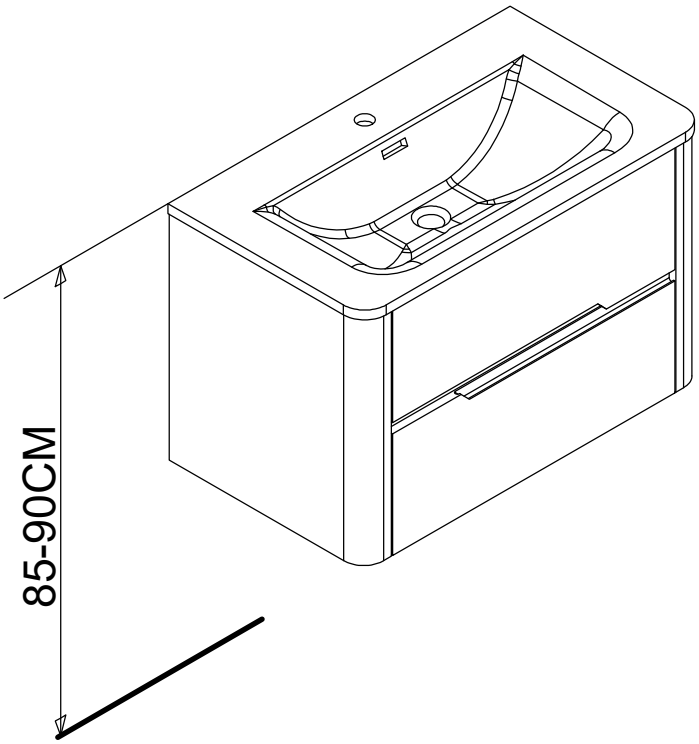

1

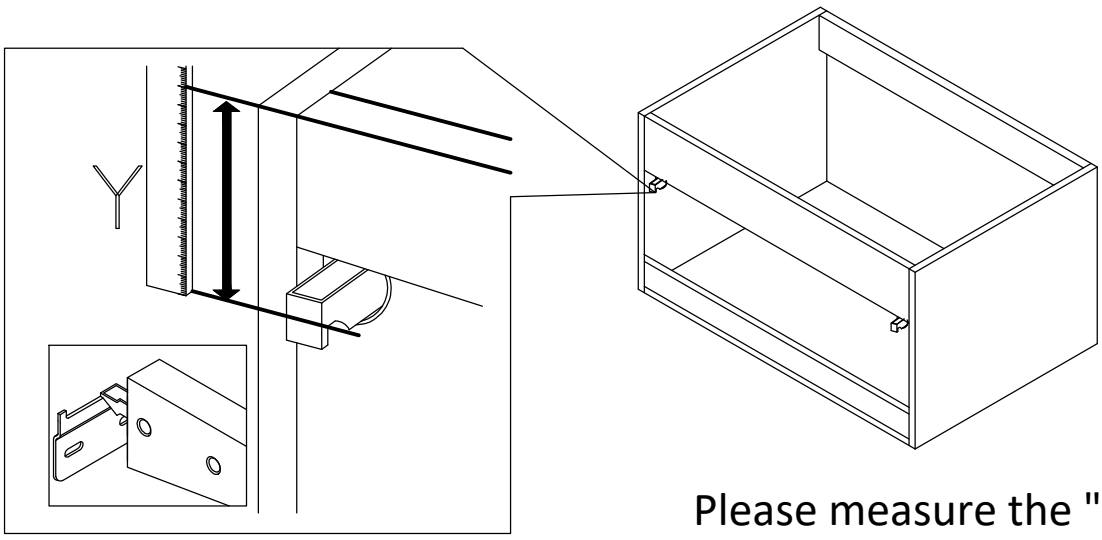

Please measure the "Y" size

2

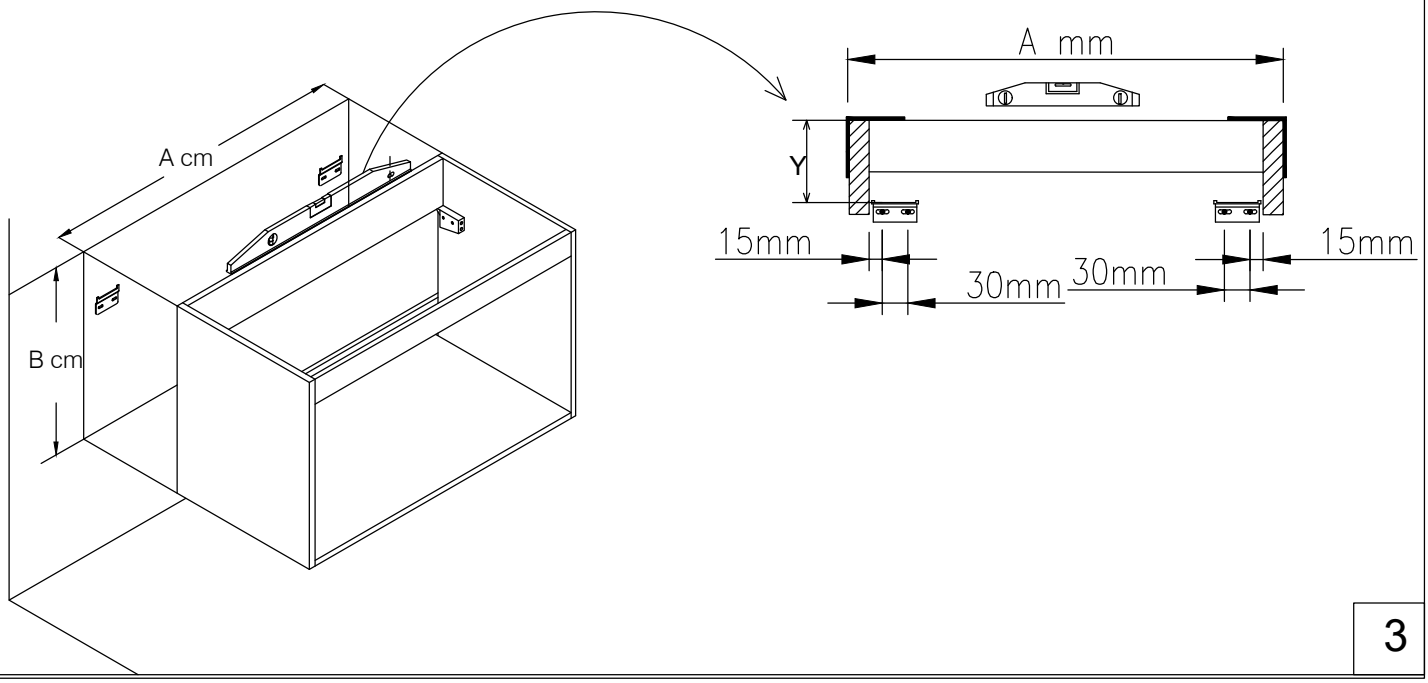

3

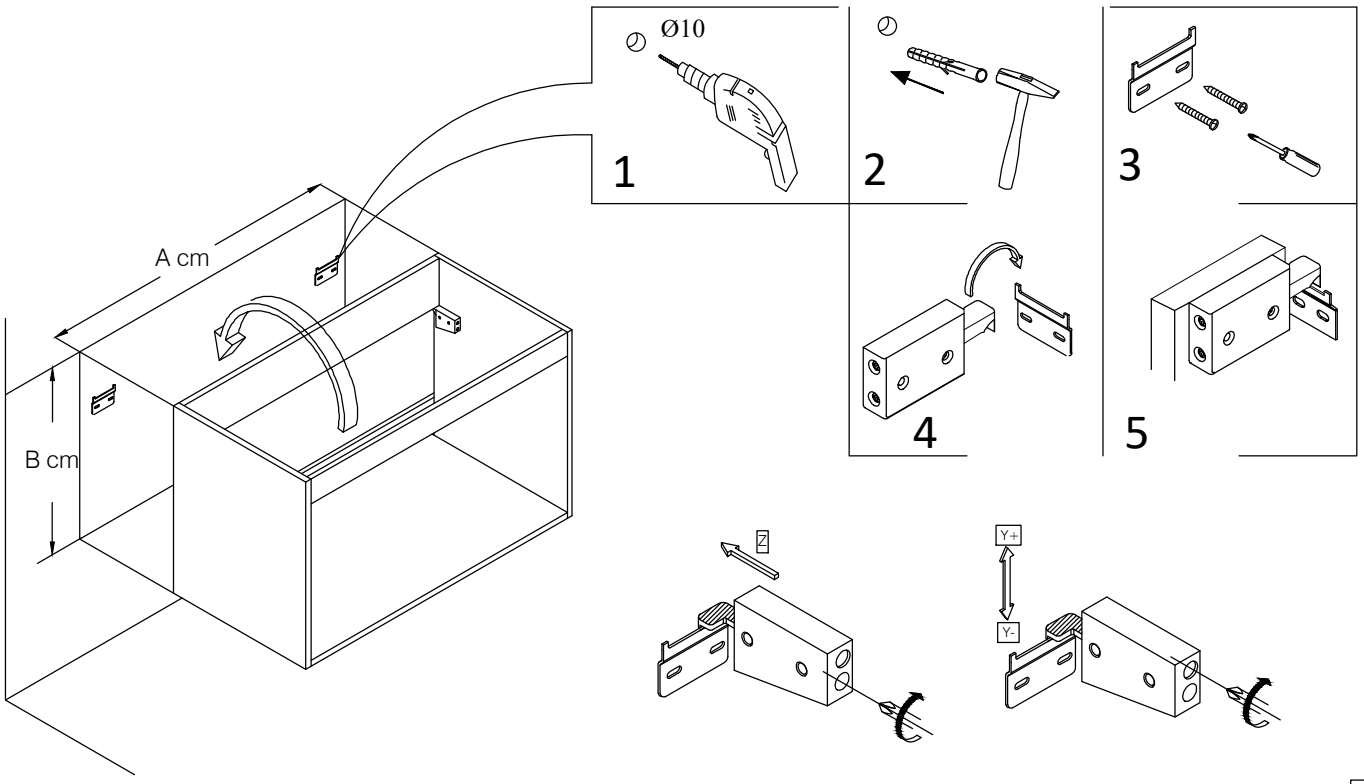

4

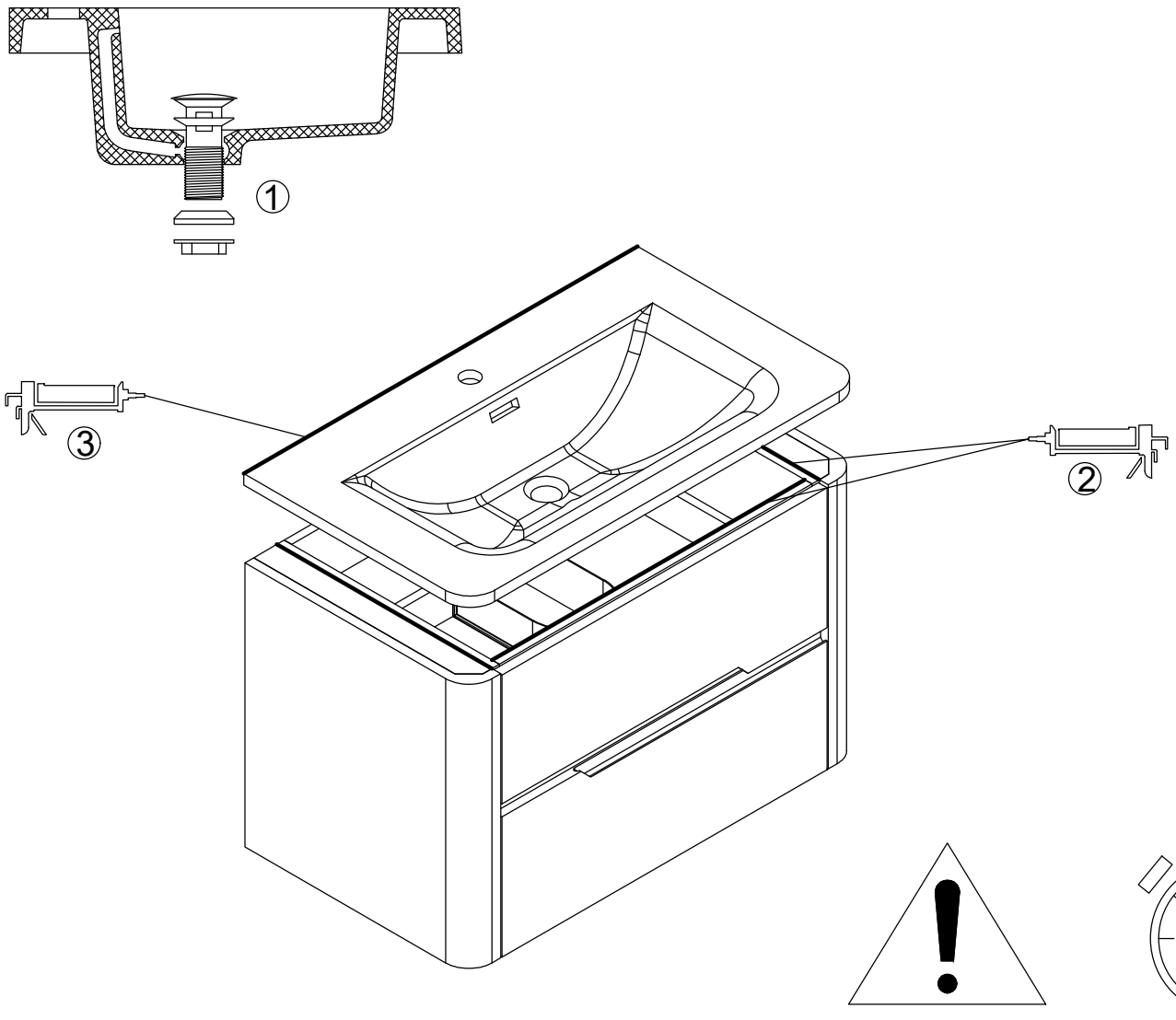

5